FourSure 44

Suspension Armrest

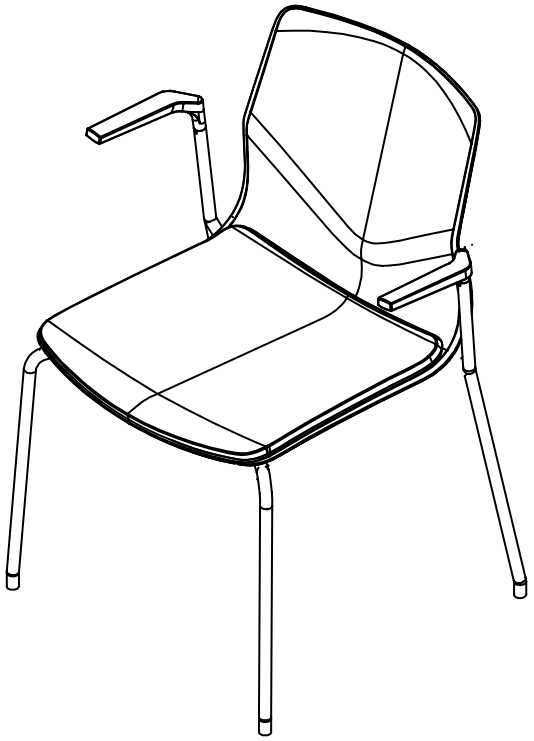

NOVAH System Technology Co.,Ltd.
Tel：400-115-1688
Web：www.novah.cc
Mail：int@novah.cc

Product Parts List

1x

1x

4x

2x

2x

1x

Step 1

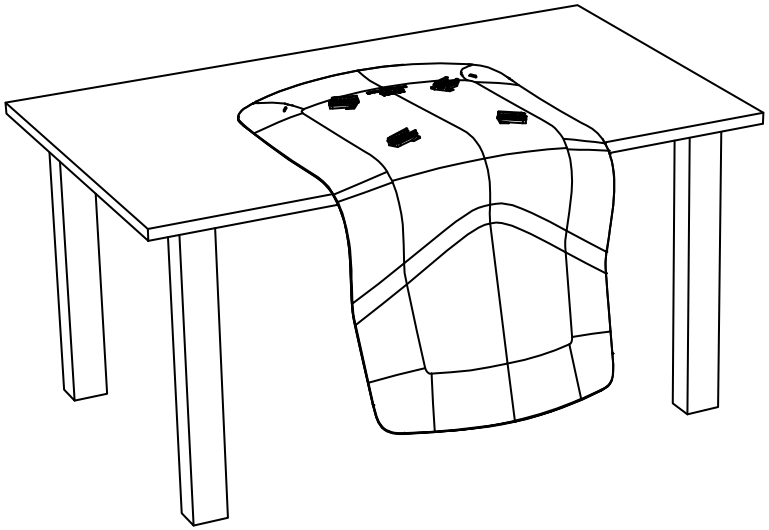

Step 2

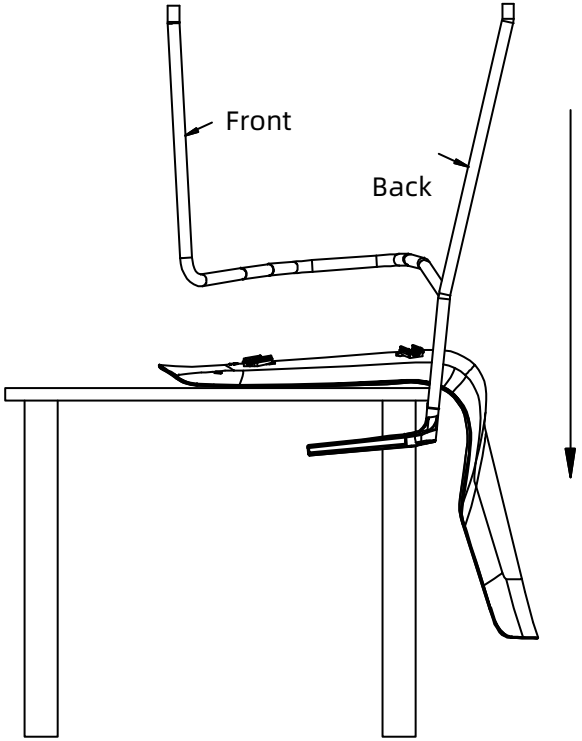

Step 3

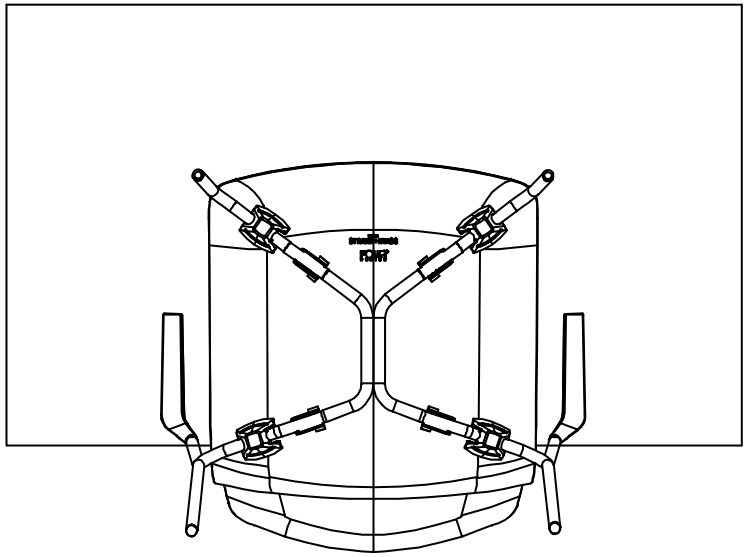

Step 4

Place four fasteners in the corresponding position and push them

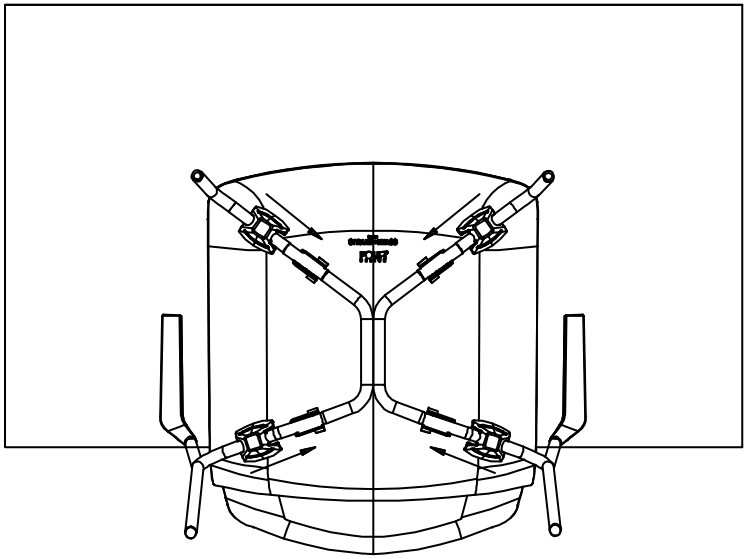

Step 5

While pushing the fasteners to the half position, knock it to the end with rubber hammer

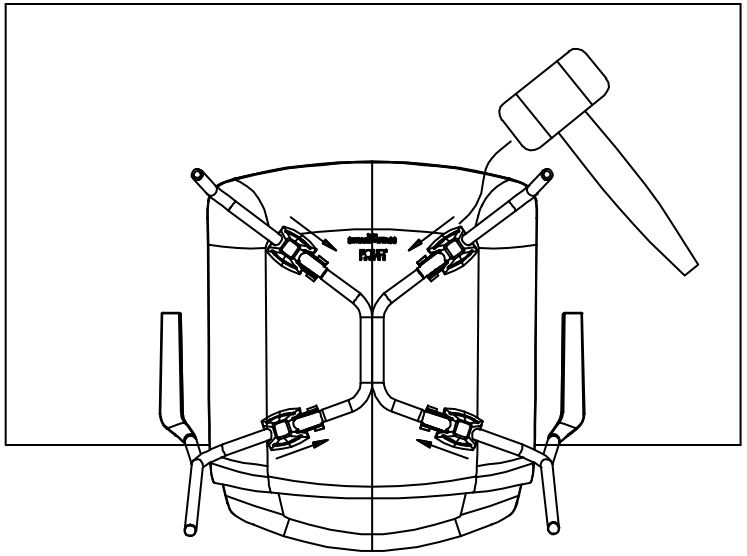

Step 6

Fit completely

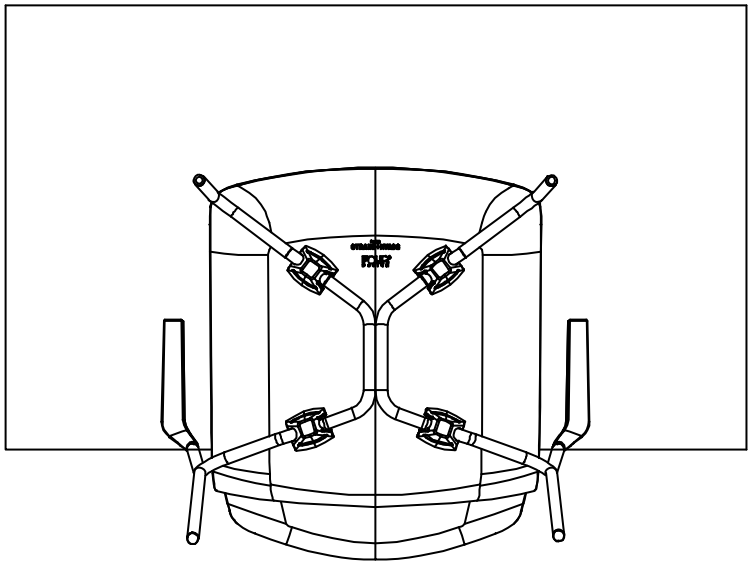

Step 7

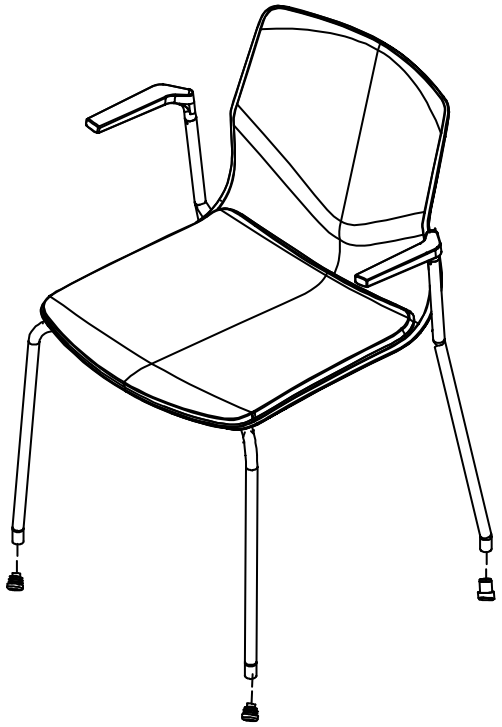

Step 8

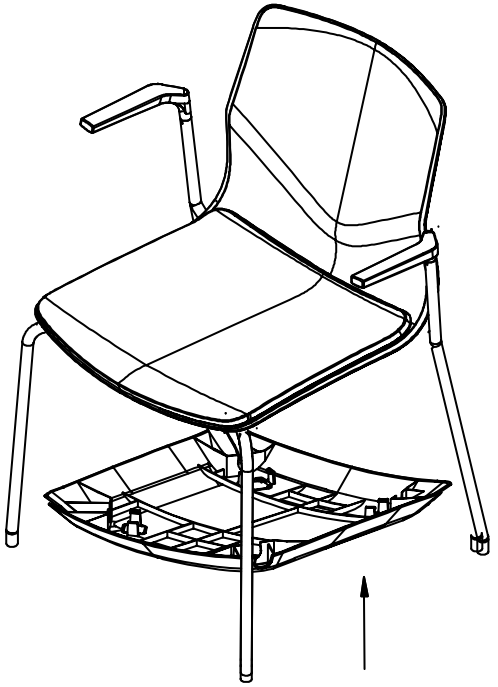
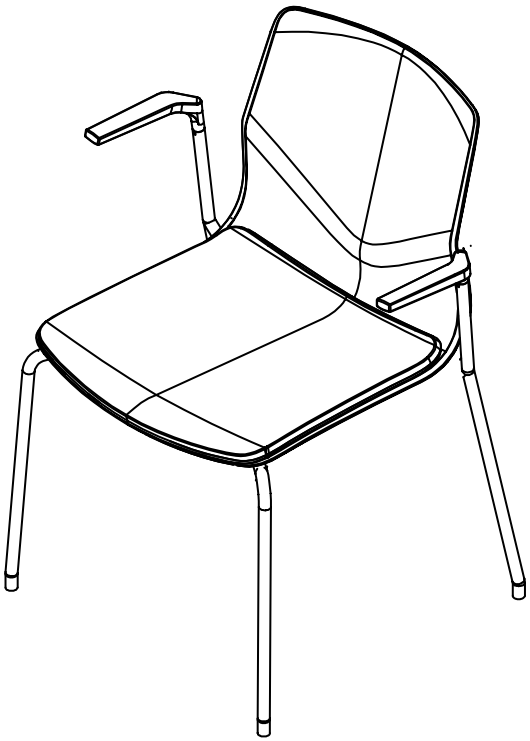
Step 9